Digital Data / Analogue Signals

- **Modulation** is the technique used to encode Digital Data onto an Analogue signal:
  - Here a *carrier signal* (a sine wave operating at frequency $\mathbf{f_c}$) is modified to represent the data stream.
- Recall that sine waves have three characteristics that can be modified:
  - Amplitude
  - Frequency
  - Phase

Digital Data / Analogue Signals

- When viewed in the frequency domain, the modified carrier signal can be seen to have a *bandlimited* (fixed range) spectrum centred on $\mathbf{f_c}$ **:**
  - This spectrum can be considered as a **channel** through which data passes,
  - Other channels can be created using other carrier signals operating at different distinct frequencies.

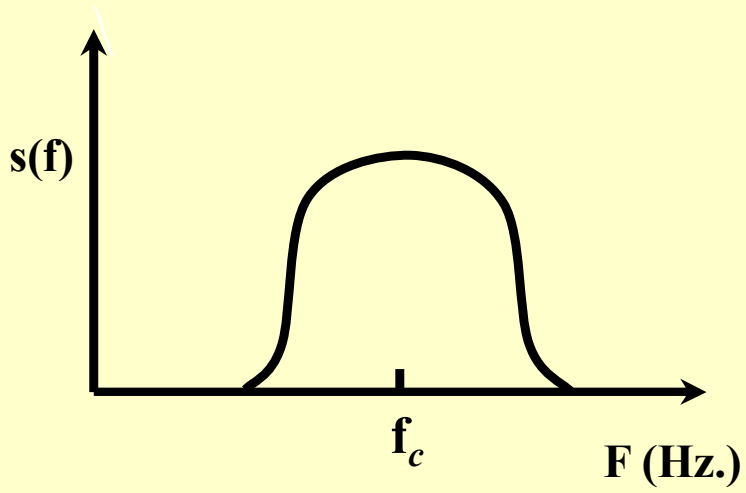

Digital Data / Analogue Signals

- Most common application for Modulation:
  - The transmission of digital data across the *Plain old Telephone System (PoTS).* PoTS was designed for transmission of analogue voice.
  - Digital radio (FM104 etc.)
- The resultant modulated analogue signal is in the *voice*-frequency range:
  - Recall this is approximately 400 - 4000 hertz
- To facilitate Full Duplex communications a combined *Modulator/Demodulator* or MODEM is used:

Digital Data / Analogue Signals

- Three modulation techniques exist
  - Amplitude shift keying
    - This involves representing *data* using two or more different *amplitudes* e.g. A_1, A_2 etc.
  - Frequency shift keying
    - This involves representing *data* using two or more different *frequencies* e.g. f_1, f_2 etc.
  - Phase shift keying
    - This involves representing *data* using two or more different phase shifts e.g. π, $\pi/4$ etc.
- The following slides show examples of all three techniques. These will be explained in class.

Shift Keying Concepts

- With each technique the modulator can be considered as having two inputs:
  - One input for the data stream (1's and 0's)
  - Another for the carrier signal (a sine wave of frequency $\mathbf{f_c}$ Hz.)
- The modulator modifies one of the parameters of the carrier signal to represent the data:
  - The modified or ***modulated*** carrier signal is then passed to the output of the Modulator.
- In reality only the data input exists, the carrier input is used for explanation purposes only and does not exist in reality.
  - Refer to the diagram on the next slide

The Modulator

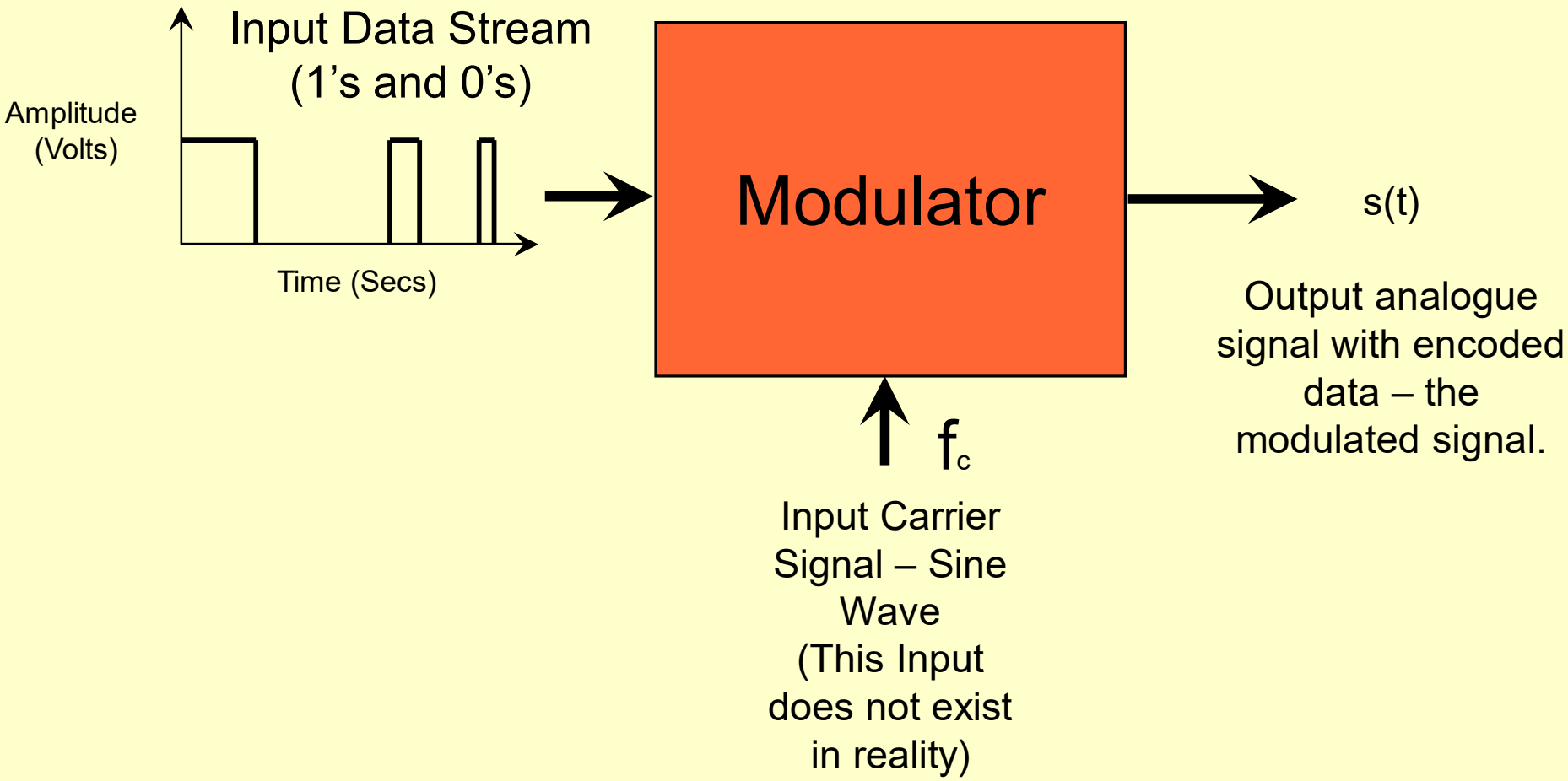

Amplitude Shift Keying

- With ASK, the modulator modifies the amplitude of the carrier signal.
- It allows one of the following to pass to the output:
  - a Full amplitude carrier signal, or,
  - a Zero amplitude carrier signal,
  - Recall that the carrier is operating at frequency f_c Hz.
- For encoding purposes the following rules apply:
  - To encode a binary zero (Space) the Zero amplitude carrier is passed to the output,
  - To encode a binary one (Mark) the Full amplitude carrier is passed to the output.

Example ASK Waveform

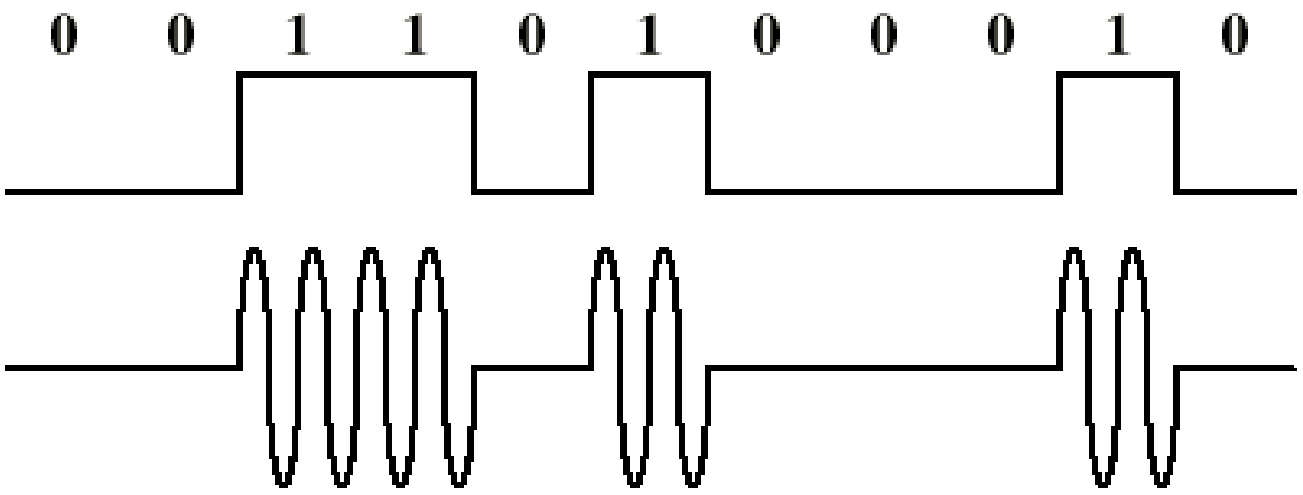

(a) Amplitude-shift keying

Frequency Shift Keying Example

- For this technique the modulator can be considered as having access to <u>two</u> other signals:
  - One operating at frequency f_1 Hz.,
  - Another operating at frequency f_2 Hz.,
  - Where: $f_1 < f_c < f_2$, and where f_c is the frequency around which the modulated signal is to be centred.
- For encoding purposes the following rules apply:
  - To encode a binary zero (Space) the f_1 signal is passed to the output.
  - To encode a binary one (Mark) the f_2 signal is passed to the output.

Example FSK Waveform

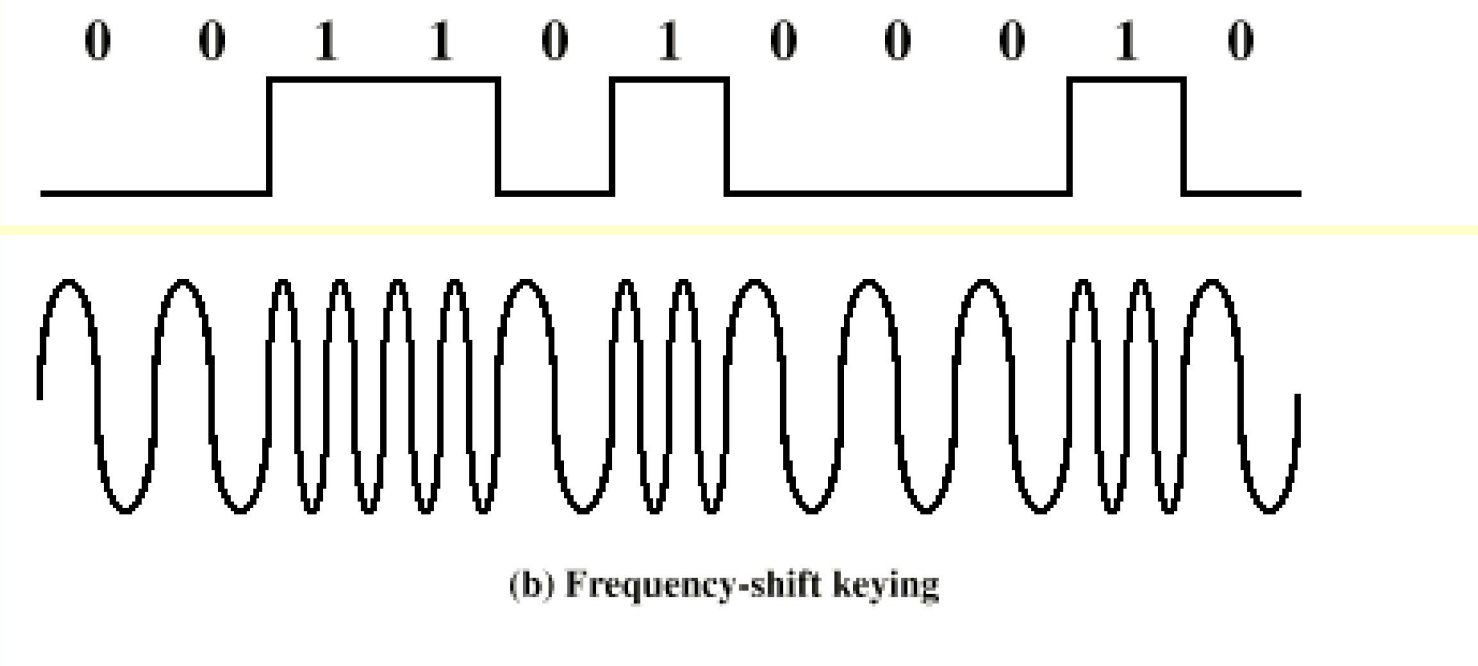

(b) Frequency-shift keying

Frequency Shift Keying Example

- The following slide shows an example of **Full Duplex** communications using FSK signals across the PoTS:
  - The term **Full Duplex** communication means communicating in both directions simultaneously,
  - This can be achieved because analogue signals can **co-exist** on a single transmission path provided they are of different frequencies.

Full Duplex FSK signal

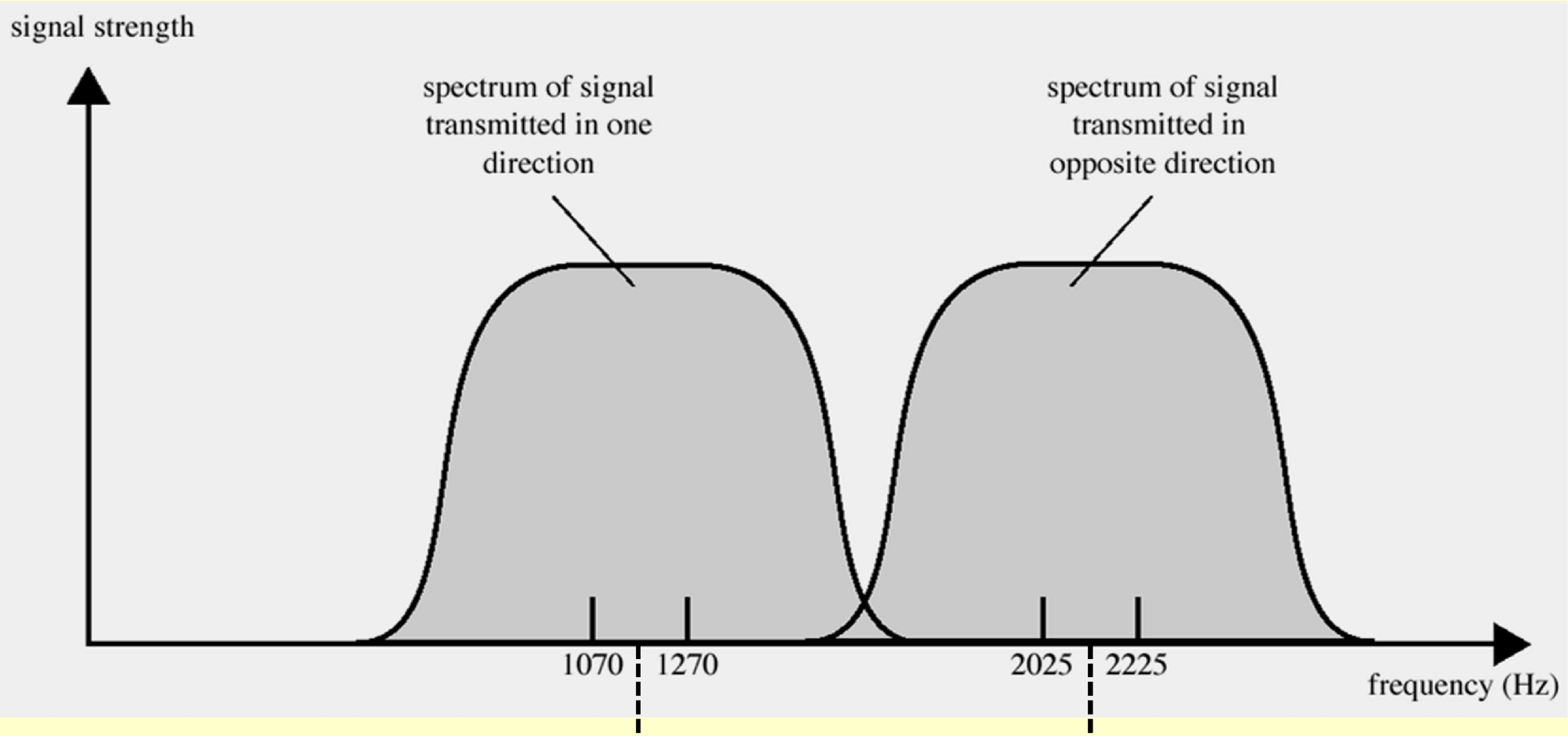

Carrier Frequency of 1170 Hz.

Carrier Frequency of 2125 Hz.

Uplink and Downlink Channels

- As can be seen, each direction of communication occurs in separate spectrums with each spectrum representing a separate ***channel of communication***:
  - An ***Uplink*** channel (centred on 1170 Hz.) and,
  - A ***Downlink*** channel (centred on 2125 Hz.).
  - 1170Hz. and 2125Hz. are the *carrier frequencies* (f_c),
  - The combined spectrum of both channels exists within the bandwidth of the PoTS link i.e. 4KHz.

Uplink and Downlink Channels

- Within each channel, two separate frequencies are used to encode Marks and Spaces (1's and 0's):
  - The ***Uplink*** channel uses 1070 Hz. (f_1) and 1270Hz. (f_2) respectively which are either side of $\mathbf{f_c}$ at 1170 Hz.,
  - The ***Downlink*** channel uses 2025Hz. (f_1) and 2225Hz. (f_2) respectively which are either side of $\mathbf{f_c}$ at 2125 Hz.

Phase Shift Keying Example

- With PSK the modulator can transmit the input carrier signal in one of two forms:
  - In-phase i.e. without modification, or,
  - Phase-shifted by ¶ radians or 180°
- For encoding purposes the following rules apply:
  - To encode a binary zero (Space) the In-phase carrier is passed to the output without modification,
  - To encode a binary one (Mark) the carrier is shifted by ¶ radians as it is passed to the output.

Example PSK Waveform

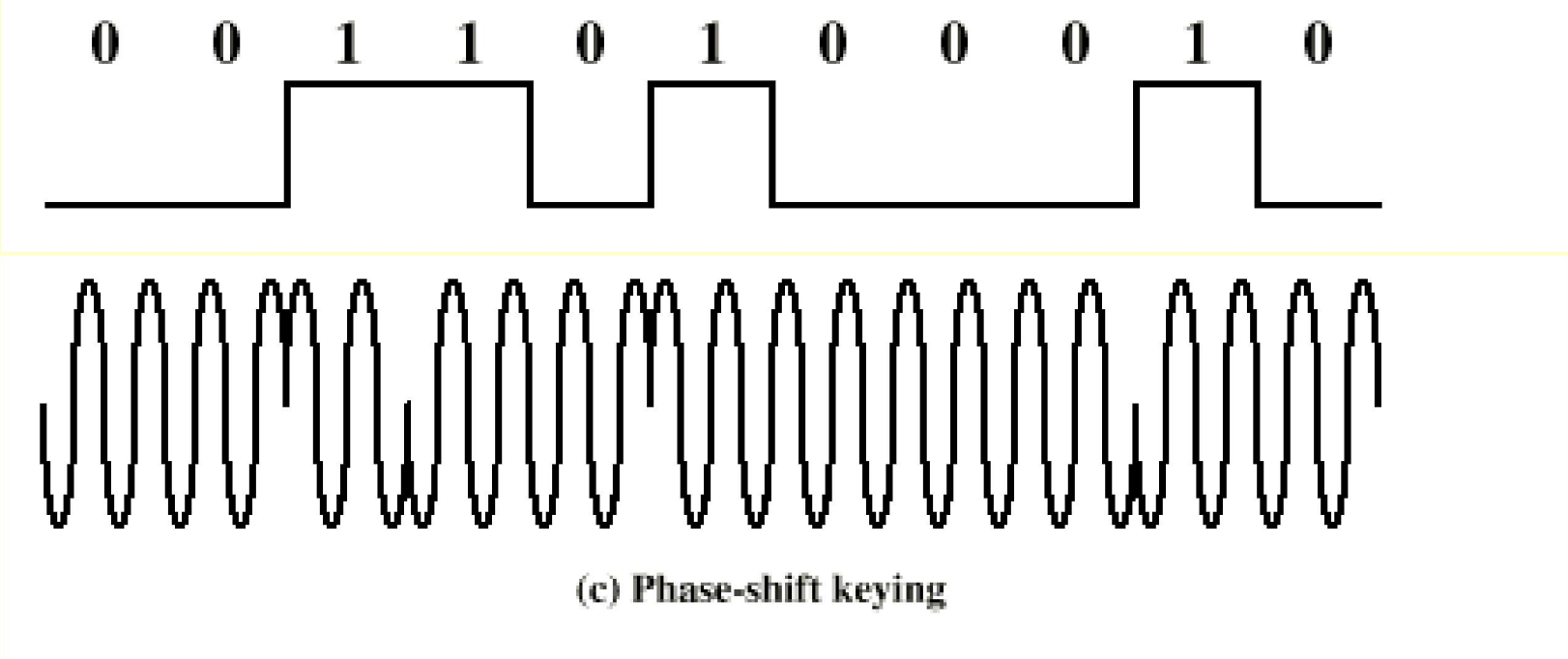

(c) Phase-shift keying

Shift Keying Analysis

- With each of the Shift Keying techniques outlined above the following analysis can be considered:
  - With each technique two versions of the carrier were used to represent the data i.e. **two** different Amplitudes, **two** different Frequencies or **two** different Phases,
  - This represents **two** different **Levels.**
- Recall Nyquist's Channel Capacity formula:

$$C = 2B\log_2 M$$

  - The M value represents the number of levels. For each of the techniques considered above the number of Levels is 2.
- Analogue encoding techniques allow for larger M values to be used as follows:
  - Consider the case with **Quadrature PSK**

Quadrature PSK

- Similar to PSK except the modulator can transmit the input carrier signal in one of **<u>four</u>** forms:
  - In-phase i.e. without modification, or,
  - Phase-shifted by multiples of $¶/_2$ radians (or 90°) i.e. $¶/_2$, $^2¶/_2$ or $^3¶/_2$
- Using this technique provides <u>four</u> different levels to be used for encoding data:
  - This means that the incoming bit stream can be divided into two-bit quantities with each two-bit quantity represented by a single modification of the carrier signal.

Quadrature PSK

- For encoding purposes the following rules may be applied:
  - To encode 00, the previously modified carrier is passed to the output without further modification,
  - To encode 01 the previously modified carrier is shifted by ($¶/_2$) radians and then passed to the output,
  - To encode 10 the previously modified carrier is shifted by (2 x $¶/_2$ or ¶) radians and then passed to the output,
  - To encode 11 the previously modified carrier is shifted by (3 x $¶/_2$) radians and then passed to the output.
- Example:
  - Consider the following bit stream: **110101101100**
  - The following slide illustrates the operation of this technique

Example QPSK Waveform

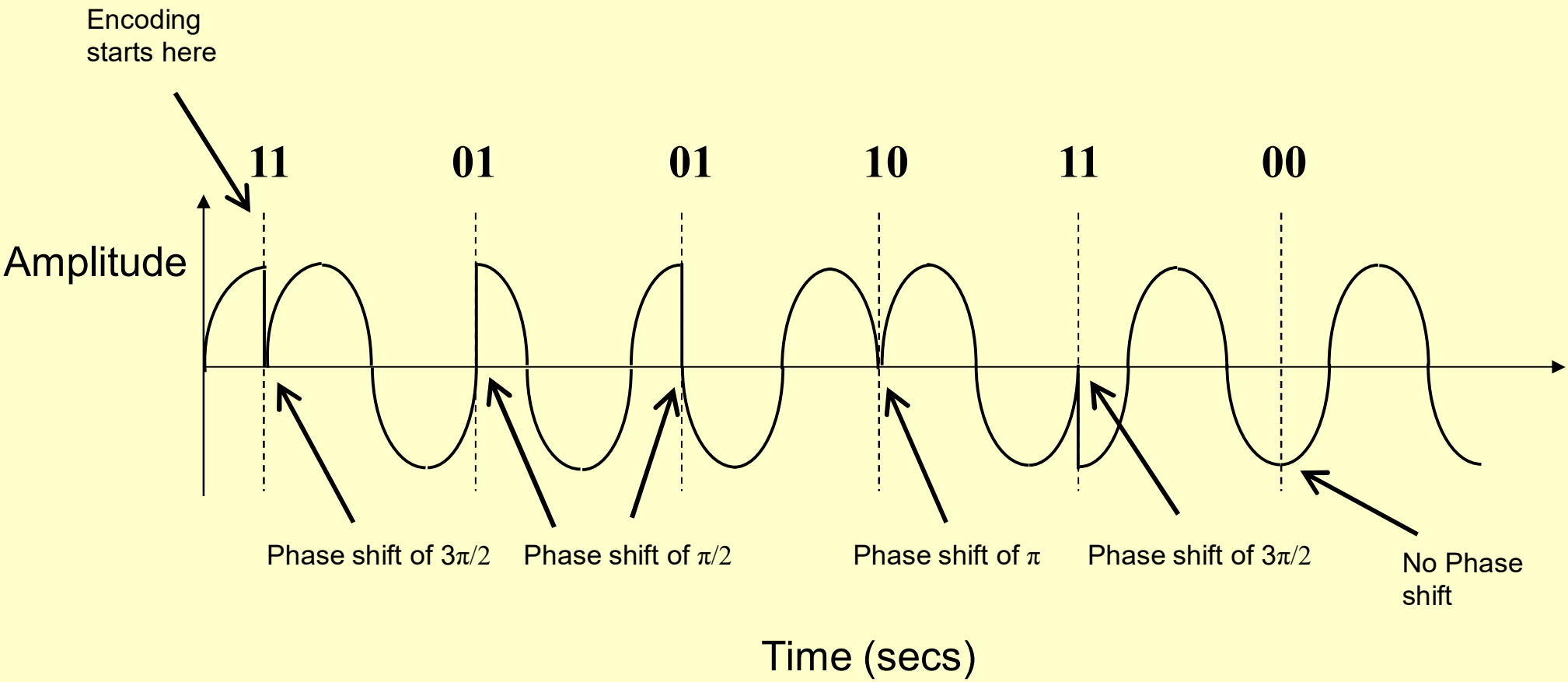

Modulation Rate V Bit Rate Revisited

- Previously the relationship between data rate and mod. rate was shown to be related as follows:

$$D = R/b$$

Where D = Mod. Rate, R = Data Rate and b = bits per sig. element

- It can also be expressed as:

$$D = R/\log_2 L$$

Where D and R are as above and L = # levels per signal element

Modulation Rate for PSK and QPSK

- Recall that the BW of the Transmission System limits the frequencies that can be transmitted:
  - This in turn limits the Data Rate.
- From analysis of the Phase Shift Keying techniques it was shown that:
  - PSK allows for one-bit encoding per signal element,
  - QPSK allows for two-bit encoding per signal element.
- If the carrier signal is transmitted at the maximum frequency allowed by the Tx Sys BW then it is clear that the Data Rate is higher when using QPSK.

Conclusions

- In general the BW of a Transmission System can be increasingly optimised for Data Transmission by using more complex encoding techniques:
  - PSK V QPSK
- This is in line with Nyquist's Channel Capacity formula:

$$C = 2B\log_2 M$$

- Choosing QPSK over PSK improves the M value which in turn improves the Channel Capacity.
- There exists other analogue encoding techniques which further improve the number of bits per signal element:
  - For example - 16-QAM, 64-QAM and 256-QAM
  - These techniques modify both the amplitude <u>and</u> phase of the carrier to represent data.